Technical data sheet

Product features

Electric fryer 2 baskets 0,74 kW/l, 11+11 l counter top drain tap 400 V / 3N		
Model	**SAP Code**	00000895
FE 1010 T	**A group of articles - web**	Fryers and French Fries Holders



- Basin volume [l]: 11
- Drain type: On the front panel
- Drain: Yes
- Maximum device temperature [°C]: 190
- Minimum device temperature [°C]: 50
- Material: Stainless steel
- Heating location: Inside the tank
- Ignition: Electric
- Number of baskets: 2
- Basket size [mm]: 300 x 240 x 120

SAP Code	00000895	**Power electric [kW]**	16.200
Net Width [mm]	744	**Loading**	400 V / 3N - 50 Hz
Net Depth [mm]	416	**Basin volume [l]**	11
Net Height [mm]	369	**Number of baskets**	2
Net Weight [kg]	22.00	**Basket size [mm]**	300 x 240 x 120

RM GASTRO, s.r.o.,
Třída Čs. armády 816,
391 81 Veselí nad Lužnicí 1, ID:49825062

Technical data sheet

Technical drawing

Electric fryer 2 baskets 0,74 kW/l, 11+11 l counter top drain tap 400 V / 3N		
Model	**SAP Code**	00000895
FE 1010 T	**A group of articles - web**	Fryers and French Fries Holders

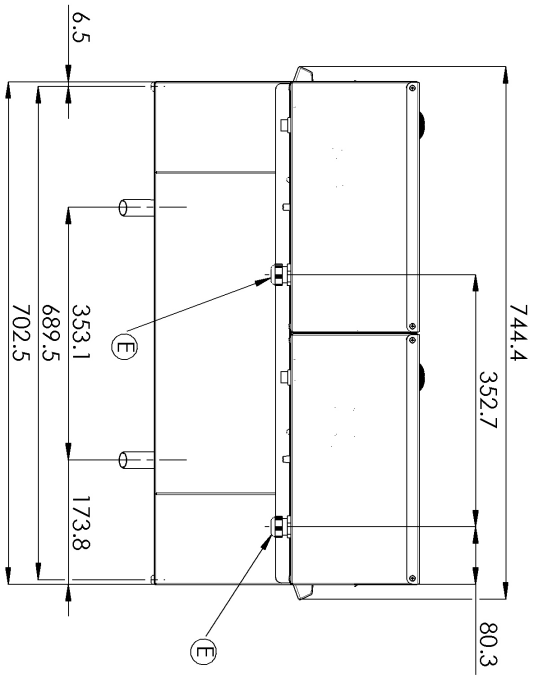

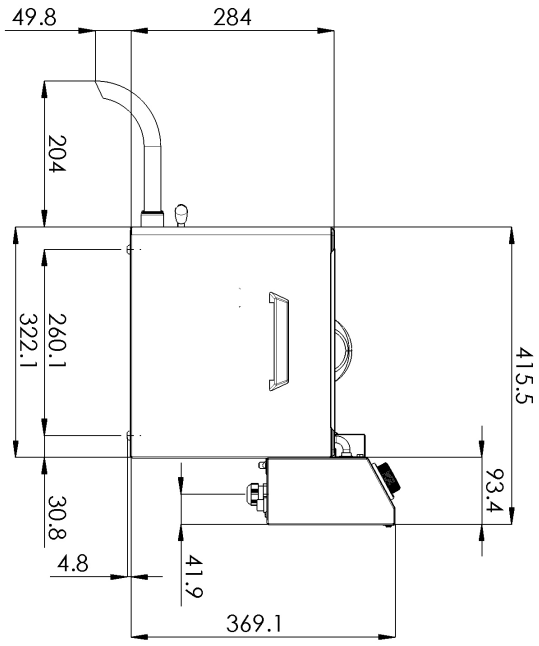

RM GASTRO, s.r.o.,
Třída Čs. armády 816,
391 81 Veselí nad Lužnicí 1, ID:49825062

Technical data sheet

Product benefits

Electric fryer 2 baskets 0,74 kW/l, 11+11 l counter top drain tap 400 V / 3N		
Model	**SAP Code**	00000895
FE 1010 T	**A group of articles - web**	Fryers and French Fries Holders

1 **All-stainless design**

long life
resistance of AISI 304 stainless steel material
the material does not cut

- savings on service interventions
- easier and faster operation

2 **Degree of protection of the control elements IPX4**

maintenance-free system
resistance to splash water
long life

- savings on service interventions
- easy cleaning and maintenance of equipment

3 **Effective cold zone**

prevents food residues from burning
there is no change in the taste of the oil

- longer oil life
- easy access and maintenance

4 **Removable heating element**

longer lifetime
easy access

- fully removable electric box with heating element for convenient cleaning and servicing
- easy access even to corners and time saving

5 **Removable container**

stainless steel container with handles

- easier cleaning and handling
- dishwasher safe

6 **Manipulation**

easy portability

- flexibility in the kitchen, can be used for banquets

7 **Prevention of spontaneous combustion**

higher rear chimney

- safer heat dissipation and separation of oil and ventilation from the fryer

8 **2 thermostats**

safety and working thermostat

- traffic safety
- prevention of spontaneous combustion
- Prevention of oil flashover

RM GASTRO, s.r.o.,
Třída Čs. armády 816,
391 81 Veselí nad Lužnicí 1, ID:49825062

Technical data sheet

Technical parameters

Electric fryer 2 baskets 0,74 kW/l, 11+11 l counter top drain tap 400 V / 3N		
Model	**SAP Code**	00000895
FE 1010 T	**A group of articles - web**	Fryers and French Fries Holders

1. **SAP Code:**
   00000895
2. **Net Width [mm]:**
   744
3. **Net Depth [mm]:**
   416
4. **Net Height [mm]:**
   369
5. **Net Weight [kg]:**
   22.00
6. **Gross Width [mm]:**
   750
7. **Gross depth [mm]:**
   515
8. **Gross Height [mm]:**
   440
9. **Gross Weight [kg]:**
   24.00
10. **Device type:**
    Electric unit
11. **Construction type of device:**
    Table top
12. **Power electric [kW]:**
    16.200
13. **Loading:**
    400 V / 3N - 50 Hz
14. **Ignition:**
    Electric
15. **Protection of controls:**
    IPX4
16. **Material:**
    Stainless steel
17. **Indicators:**
    operation and warm-up
18. **Worktop material:**
    AISI 304
19. **Worktop Thickness [mm]:**
    0.80
20. **Standard equipment for device:**
    lid and basket
21. **Basin volume [l]:**
    11
22. **Maximum device temperature [°C]:**
    190
23. **Minimum device temperature [°C]:**
    50
24. **Safety thermostat up to x ° C:**
    235
25. **Adjustable feet:**
    Yes
26. **Heating element material:**
    AISI 304
27. **Number of baskets:**
    2
28. **Basket size [mm]:**
    300 x 240 x 120

RM GASTRO, s.r.o.,
Třída Čs. armády 816,
391 81 Veselí nad Lužnicí 1, ID:49825062

Technical data sheet

Technical parameters

Electric fryer 2 baskets 0,74 kW/l, 11+11 l counter top drain tap 400 V / 3N		
Model	**SAP Code**	00000895
FE 1010 T	**A group of articles - web**	Fryers and French Fries Holders

29. Heating element construction:
Large surface area coiled heating element to extend its life and heat the oil bath evenly

30. Drain type:
On the front panel

31. Drain:
Yes

32. Heating location:
Inside the tank

33. Cross-section of conductors CU [mm²]:
5

RM GASTRO, s.r.o.,
Třída Čs. armády 816,
391 81 Veselí nad Lužnicí 1, ID:49825062